Critical Path

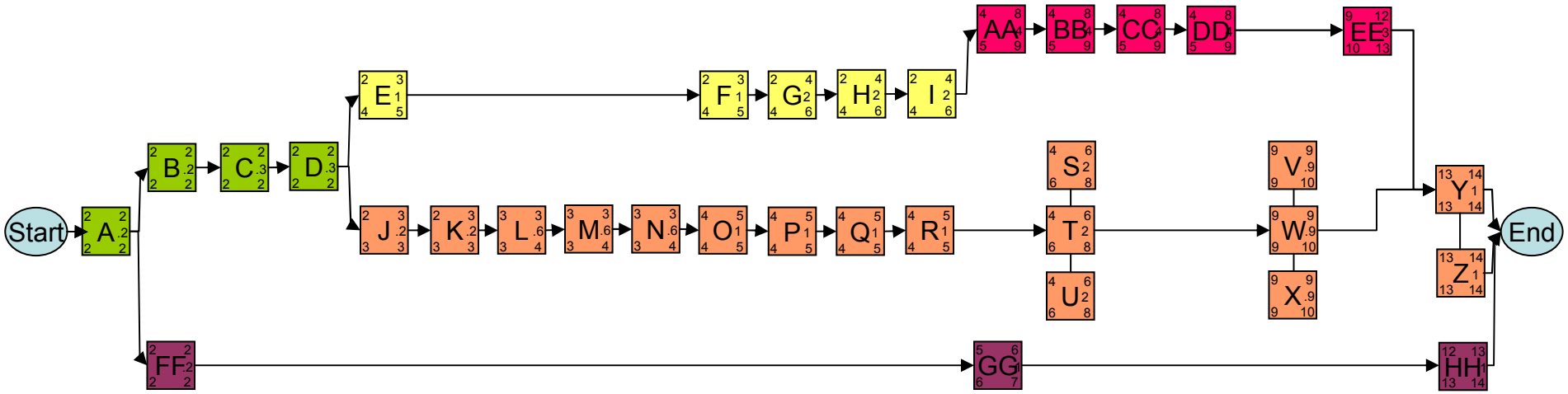

Key

Revised:
Printed:

Quatro